Index	CCN-No.	Description of change	drawn by Date	checked by Date	appr. by Date
16	E87018	Drawing take over to CATIA V5 / Zeichnungsübernahme zu CATIA V5. Replacement of the element / Ersatz des Elementes: 11 895 86 S01 was / war 45 037 52 105.	SAWALL_R 25.06.18	SCHULZ_F 10.07.2018	SCHULZ_F 10.07.2018

DIN ISO 228
BUT WITH PITCH DIAMETER/
JEDOCH MIT FLANKENDURCHMESSER
⌀40.431 /+0.36

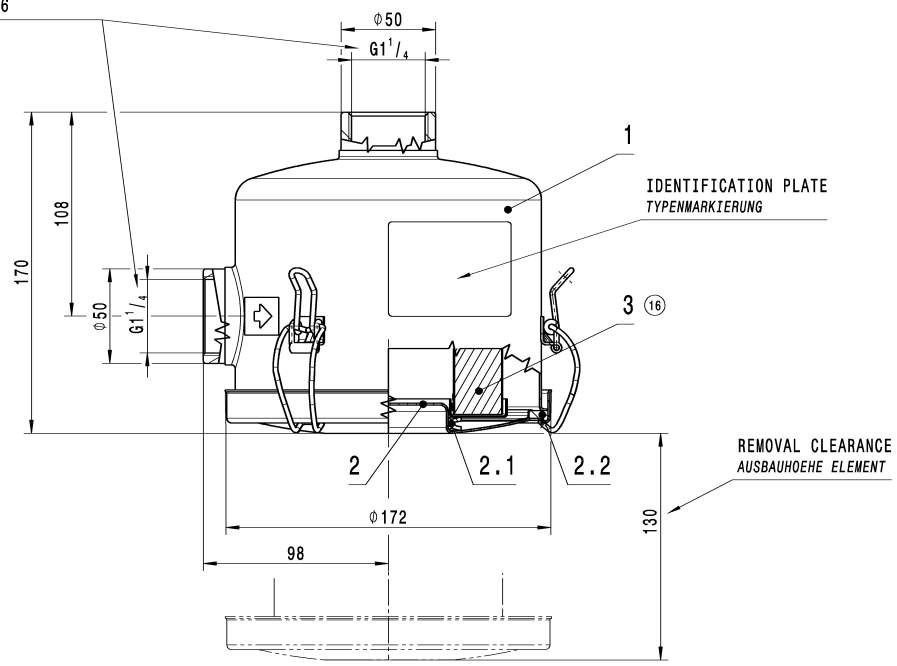

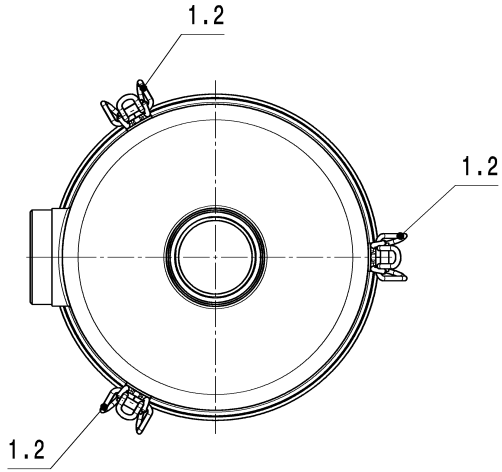

TIGHT AT 950 mbar UNDERPRESSURE
DICHT BEI 950 mbar UNTERDRUCK

DIM. WITHOUT TOLERANCES: MASSE OHNE TOLERANZANGABEN:	
LENGTHS LAENGEN	± 2
RADII RADIEN CHAMFERS FASEN	± 2
ANGLE WINKEL	± 2°

POS. POS.	NAME BENENNUNG	PART-NO. BESTELL-Nr.	CUSTOMER-NO. FREMD-NR.
3	Main element *Hauptelement*	C 1337	
2.2	Seal ring *Dichtring*	23 151 33 101	
2.1	Seal ring *Dichtring*	23 059 33 101	
2	Cover assy *Deckel vst*	45 037 17 991	
1.2	Lock assy *Verschluss vst*	25 070 55 981	
1	Housing pot assy *Gehaeusetopf vst*	45 037 12 981	

SPARE PARTS LIST / *ERSATZTEILLISTE*

Customer Part No.
Kundenteilenummer

Sales designation
Verkaufsbezeichnung

MANN+HUMMEL

Property of / Eigentümer
MANN+HUMMEL Group
Ludwigsburg
Germany

Customer Drawing
Angebotszeichnung

Refer to protection notice ISO 16016/u
The reproduction, distribution and utilization of this document as well as the communication of its contents to others without explicit authorization is prohibited. Offenders will be held liable for the payment of damages. All rights reserved in the event of the grant of a patent, utility model or design.

	DD.MM.YYYY	Name
drawn by	25.06.2018	SAWALL_R
checked by	10.07.2018	SCHULZ_F
approved by	10.07.2018	SCHULZ_F

Language code / Sprachschlüssel: DE
all dimensions in / alle Maße in: [mm]

Proj.-No. / Proj.-Nr.:
substitute for / Ersatz für: 4503772115
similar / ähnlich:
Weight (calculated) / Gewicht (berechnet): [g] 1779

Tolerance standard / Tolerierungsprinzip: SIZE ISO 14405

Part name / Benennung: PICO-AIR FILTER / PICO-LUFTFILTER

Scale / Maßstab: 1:2
Sheet / of: 1 / 1
A2
Drawing-No. / Zeichnungs-Nr.: 45 037 72 105
Index / Index: 16